Dart Aerospace Ltd.

Date: Wednesday, 29/08/2007 3:24:37 PM
User: Linda Lacelle

Process Sheet

Customer	: CU-DAR001 Dart Helicopters Services	**Drawing Name**	: BRACKET ASSEMBLY
Job Number	: 34325		
Estimate Number	: 11036		
P.O. Number	: N/A	**Part Number**	: D2804041
This Issue	: 29/08/2007 **S.O. No.** : N/A	**Drawing Number**	: D2804 REV C
Prsht Rev.	: NC	**Project Number**	: N/A
First Issue	: N/A **Type** : SMALL /MED FAB	**Drawing Revision**	: C
Previous Run	: 34324	**Material**	: N/A
Written By	:	**Due Date**	: 30/09/2007 **Qty:** 3 **Um:** Each
Checked & Approved By	:		
Comment	: Est F 05.03.30 MS21043-3 was MS21042L3 KJ/JLM Est Rev:G As per Rev C 06-11-08 JLM		

Additional Product

Job Number:

Seq. #:	Machine Or Operation:	Description :
1.0	SMALL FAB 1	SMALL & MEDIUM FAB RESOURCE 1

Comment: SMALL & MEDIUM FAB RESOURCE 1

REMOVE FROM STK:
3 X D2804-041 B 29-07

DISASSEMBLE, DISCARD HARDWARE SB 07/08/29 (3)

2.0	HAND FINISHING1	HAND FINISHING RESOURCE #1

Comment: HAND FINISHING RESOURCE #1 (3X)

Smd & sauff bracket

~~REMOVE WHITE POWDER COAT WITH STRIPPER~~

RE-ALODINE PER QSI 005 M102316 ~~M104846~~ M.L 07/08/30

REPAINT SANDTEX GREEN PER QSI005

3.0	SMALL FAB 1	SMALL & MEDIUM FAB RESOURCE 1

Comment: SMALL & MEDIUM FAB RESOURCE 1 N/A already pressed

Press D2805-1 Into arm as per Dwg D2804

4.0	QC3	INSPECT POWDER COAT/CHEMICAL CONVERSION

Comment: INSPECT POWDER COAT/CHEMICAL CONVERSION MF 07-08-30

Form: rprocess

Dart Aerospace Ltd

W/O:		WORK ORDER CHANGES					
DATE	STEP	PROCEDURE CHANGE	By	Date	Qty	Approval Chief Eng / Prod Mgr	Approval QC Inspector

Part No: _____ **PAR #:** _____ **Fault Category:** _____ **NCR:** Yes No **DQA:** _____ **Date:** _____

QA: N/C Closed: _____ **Date:** _____

NCR:		WORK ORDER NON-CONFORMANCE (NCR)						
DATE	STEP	Description of NC Section A	Corrective Action Section B			Verification Section C	Approval Chief Eng	Approval QC Inspector
			Initial Chief Eng	Action Description Chief Eng	Sign & Date			

NOTE: Date & initial all entries

Date: Wednesday, 29/08/2007 3:24:37 PM
User: Linda Lacelle

Process Sheet

Customer: CU-DAR001 Dart Helicopters Services **Drawing Name:** BRACKET ASSEMBLY

Job Number: 34325 **Part Number:** D2804041

Job Number:

Seq. #:	Machine Or Operation:	Description :
5.0	SMALL FAB 1	SMALL & MEDIUM FAB RESOURCE 1

Comment: SMALL & MEDIUM FAB RESOURCE 1
Press D2809 into arm as per Dwg D2804

6.0 AN3C16A Bolt

Comment: Qty.: 2.0000 Each(s)/Unit Total : 6.0000 Each(s)
Bolt
Pick:

Qty	Part Number	Description	Batch
2	AN3C16A	Bolt	M102552

7.0 MS210433 Nut

Comment: Qty.: 2.0000 Each(s)/Unit Total : 6.0000 Each(s)
Nut
Pick:

Qty	Part Number	Description	Batch
2	MS21043-3	Nut	M105211

8.0 NAS1515H3 Washer

Comment: Qty.: 4.0000 Each(s)/Unit Total : 12.0000 Each(s)
Washer M105164 7/8/30 (3)
Pick:

Qty	Part Number	Description	Batch	4 NAS1515H3	Washer
~~M104929~~					
A/R	LPS-3	Corrosion Spray	M104929		

9.0 SMALL FAB 1 SMALL & MEDIUM FAB RESOURCE 1

Comment: SMALL & MEDIUM FAB RESOURCE 1
1-Spray LPS-3 on Bolt Shaft, not on thread as per Dwg D2804
2-Assemble as per Dwg D2804. mf 07-08-30 (7)

Form: rprocess

Dart Aerospace Ltd

W/O:		WORK ORDER CHANGES					
DATE	STEP	PROCEDURE CHANGE	By	Date	Qty	Approval Chief Eng / Prod Mgr	Approval QC Inspector

Part No: _____ PAR #: _____ Fault Category: _____ NCR: Yes (No) DQA: _____ Date: 07/08/31

QA: N/C Closed: _____ Date: _____

NCR:		WORK ORDER NON-CONFORMANCE (NCR)						
DATE	STEP	Description of NC Section A	Corrective Action Section B			Verification Section C	Approval Chief Eng	Approval QC Inspector
			Initial Chief Eng	Action Description Chief Eng	Sign & Date			

NOTE: Date & initial all entries

Date: Wednesday, 29/08/2007 3:24:37 PM
User: Linda Lacelle

Process Sheet

Customer: CU-DAR001 Dart Helicopters Services **Drawing Name:** BRACKET ASSEMBLY

Job Number: 34325 **Part Number:** D2804041

Job Number:

Seq. #:	Machine Or Operation:	Description :
10.0	QC5	INSPECT WORK TO CURRENT STEP
	Comment: INSPECT WORK TO CURRENT STEP	SB 07/08/30 (3)
11.0	PACKAGING	PACKAGING RESOURCE #1
	Comment: PACKAGING RESOURCE #1 Identify and Stock USING NEW B/N Location: G A	SB 07/08/30 (3)
12.0	QC21	FINAL INSPECTION/W/O RELEASE
	Comment: FINAL INSPECTION/W/O RELEASE	(3) 07/08/31

Job Completion

U 07-08-30

Form: rprocess

DESIGN	DRAWN BY	DART AEROSPACE LTD HAWKESBURY, ONTARIO, CANADA	
CP	CP		
CHECKED	APPROVED	DRAWING NO.	REV. C
		D2804	SHEET 1 OF 2
DATE		TITLE	SCALE
06.10.16		STA 155 BRACKET	1:3

A	00.11.07	NEW ISSUE
B	04.11.22	ADD CUTOUTS & −043/−044
C	06.10.16	CHANGE GEOM. TO ADD CLEARANCE

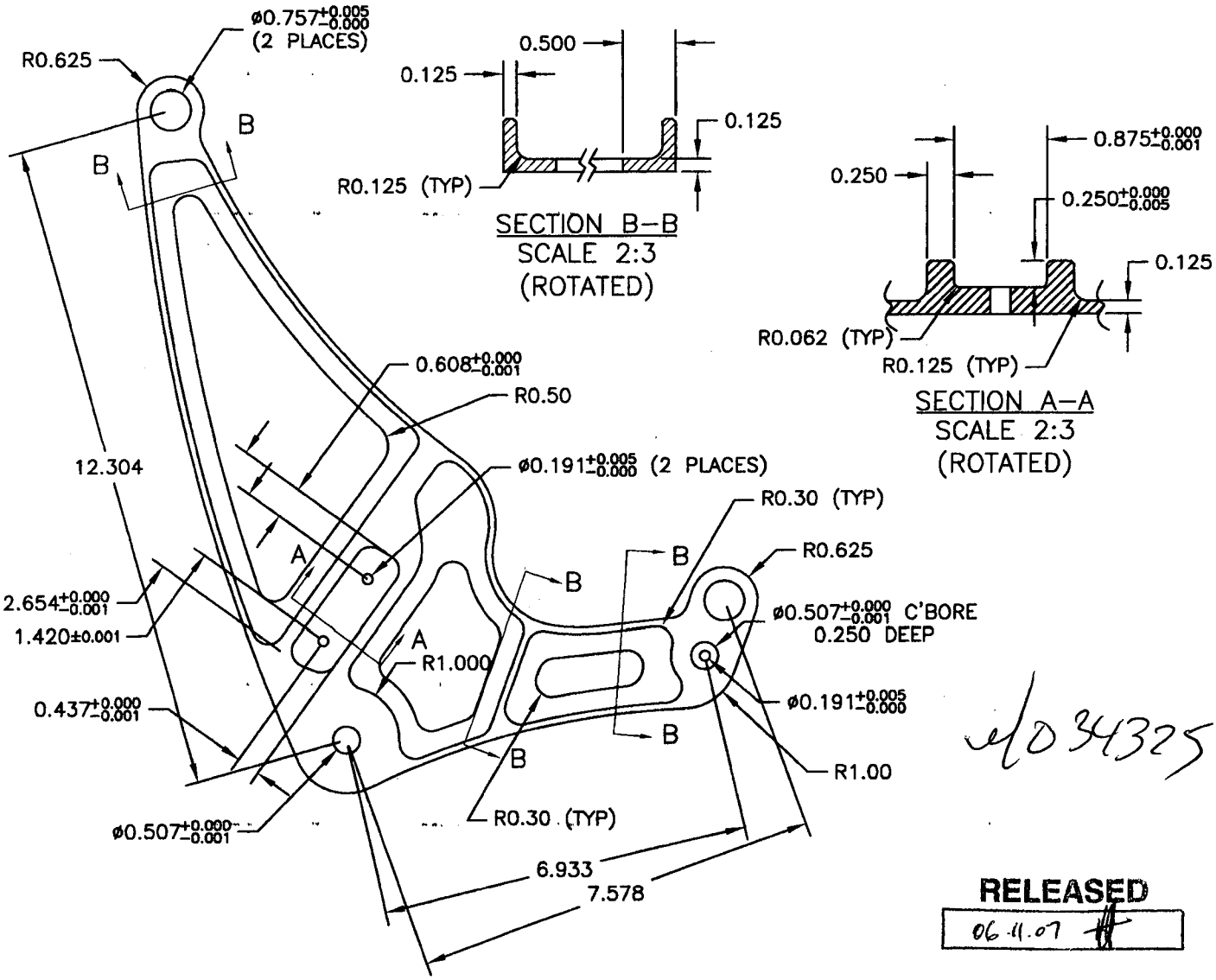

ed 034325

RELEASED
06.11.07

D2804−1 BRACKET (SHOWN), D2804−2 BRACKET (OPPOSITE)

1) MACHINE PER DRAWING FILE "D2804−1C.SLDPRT"
2) MATERIAL: 6061−T6 (QQ−A−200/8) OR (QQ−A−250/11) 0.500 THICK
3) DEBURR TO LEAVE R0.030 − 0.063 ON ALL EDGES
4) FINISH: CHEMICAL CONVERSION COAT PER DART QSI 005 4.1
5) TOLERANCES ARE PER DART QSI 018 UNLESS OTHERWISE NOTED

DESIGN	DRAWN BY	DART AEROSPACE LTD HAWKESBURY, ONTARIO, CANADA	
CP	CP		
CHECKED	APPROVED	DRAWING NO.	REV. C
		D2804	SHEET 2 OF 2
DATE		TITLE	SCALE
06.10.16		STA 155 BRACKET	1:3

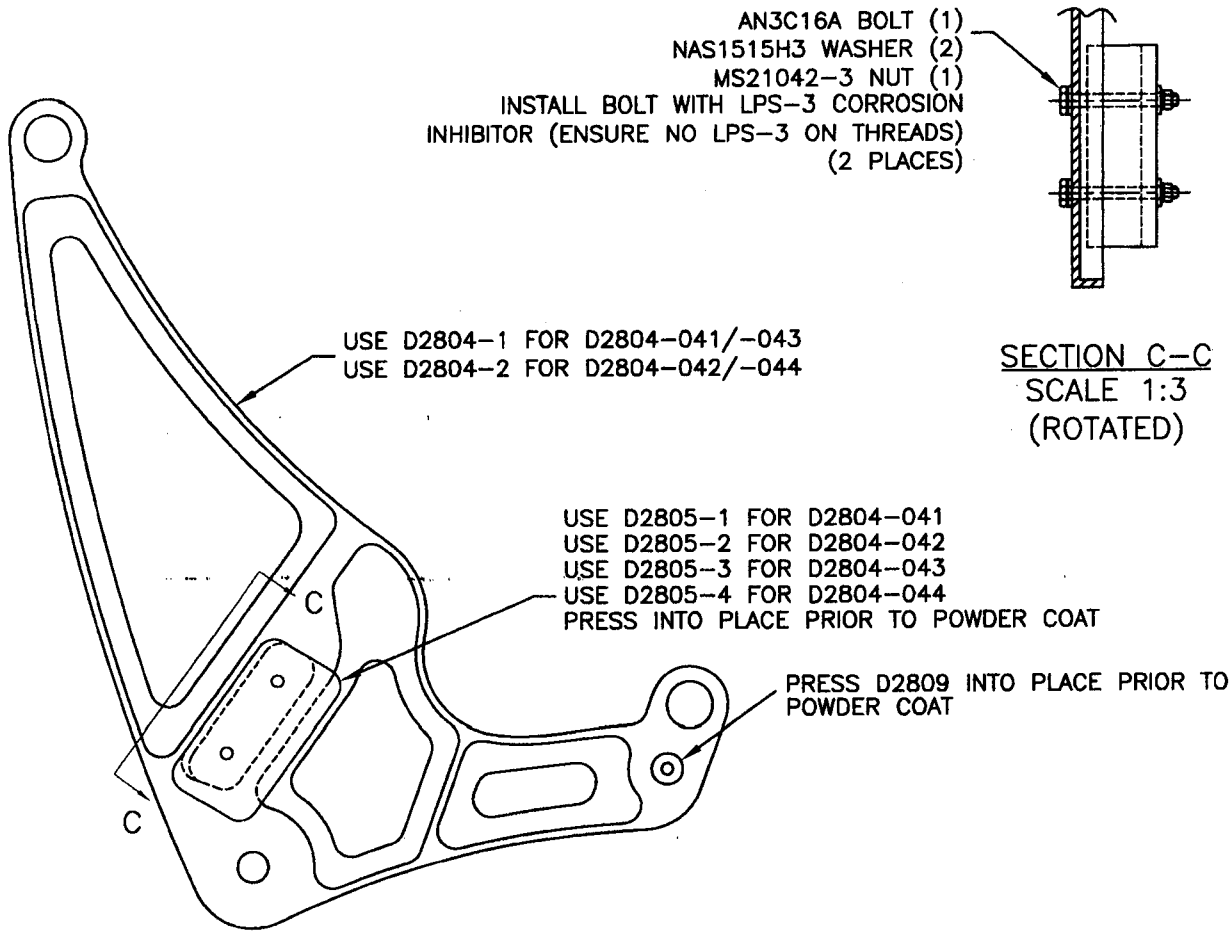

RELEASED
06.11.07

D2804-041/-043 BRACKET ASS'Y (SHOWN).
D2804-042/-044 BRACKET ASS'Y (OPPOSITE)

6) FINISH: POWDER COAT ASSEMBLY GLOSS WHITE (4.3.5.1) OR GREY SANDTEX (4.3.5.6) OR BLACK SANDTEX (4.3.5.7) OR GREEN SANDTEX (4.3.5.8) PER DART QSI 005 4.3